ENGLISH

WE LOVE RICE SUZUMO

It makes beautiful Rice Sheet for Roll Sushi Fast and Consistently !

Just press operation button, then it will spread sushi rice for your rolls. 6 different sizes can be memorized.

Rice sheet Machine

SVR-NYA

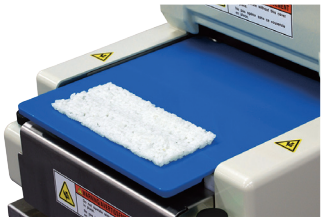

Small Roll Sheet

Medium Roll Sheet

Large Roll Sheet

NRTL IAPMO EGS C US

Supporting 7 Languages

LCD operation touch panel can be displayed in either English, French, German, Spanish, Korean, Chinese, and Japanese by user selection on panel.

Sushi Making Machine No.1 World Market Share

FUJI KEIZAI CO., LTD.[Current status and future outlook of worldwide robot-related markets]Results for 2024 Sales Quantity and Amount for Sushi Making Machine

Rice sheet Machine SVR-NYA

■ Dimensions

Unit: mm

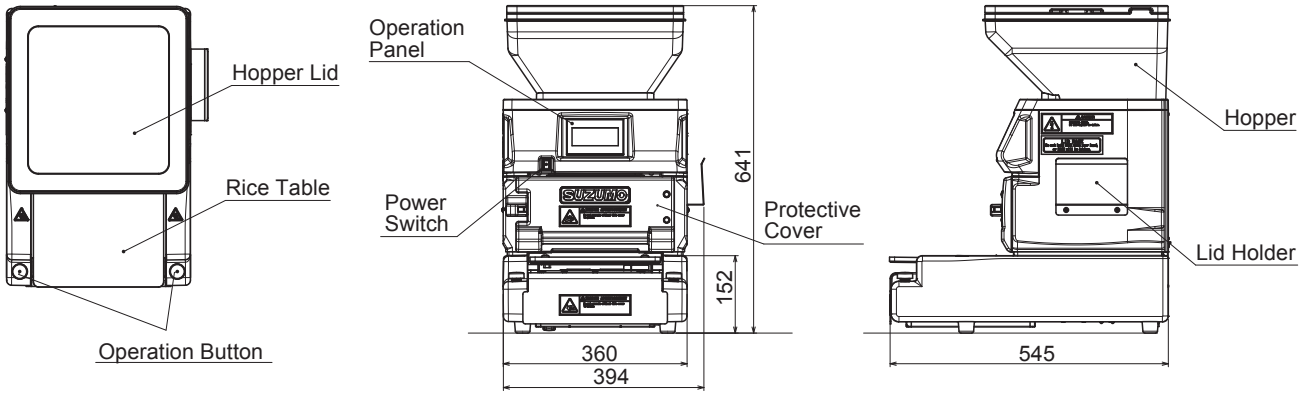

■ Specifications

Model
SVR-NYA-ET (Meets UL/NSF standards)

Input
AC100-240V
50/60 Hz, Single phase

Power consumption
80W

Capacity
Small roll: 950 sheets/hr (at rice 80 mm long)
Medium roll : 850 sheets/hr (at rice 120mm long)
Large roll : 750 sheets/hr (at rice 180mm long)
*Production capacity varies by operator's working speed.

Hopper capacity
MAX 8.5kg of cooked rice

Machine dimensions (in mm)
394W×545D×641Hmm

Weight
33.5kg

■ Features

- **Time Saving**
  It spreads sushi rice in a couple of second. You can save much time.
- **Quality**
  It spreads sushi rice without smashing rice grains. You can get consistent quality no mater who operation it.
- **Flexibility**
  Length, thickness, even density of rice sheet can be adjusted. Six (6) different sizes can be memorized.
- **Easy to clean**
  It is designed for simple and easy cleaning.

*Design and specification subject to change without notice.

WE LOVE RICE SUZUMO https://www.suzumokikou.com

< Japan Office >
Suzumo Machinery Co., Ltd.
Global Business Department
e-mail overseas@suzumo.co.jp Tel. +81 3-3993-1407

< Contact in Singapore >
Suzumo Singapore Corporation Pte. Ltd. (SSC)
e-mail sales@suzumo-sg.com Tel. +65 6254-2080

Contact us

20260710