Counters & Undercounters

TUC-27D-2-HC

Undercounter Foodservice Refrigerator, 2 Drawers

Dimensions	
External Width (mm)	702
External Depth (mm)	766
External Height (mm)	839
Exclusions	Depth does not include 26 mm for rear bumpers.
Net Volume (Litres)	39
Gross Volume (Litres)	184
Per Drawer Capacity (max depth mm)	1x 1/1 GN (150)
Unpackaged Weight (kg)	92
Packaged Weight (kg)	103
Packaged Dimensions (W x D x H mm)	769 x 839 x 1207
Supplied with	Heavy duty lock-in-place ⌀ 64 mm castors (83 mm height) (reduced height option available, totals 810 mm)

Build	
Drawer Count	2
Exterior Construction	Stainless steel front & countertop, aluminium sides & rear
Interior Construction	Clear coated aluminium, stainless steel base
Air Intake Position	Front
Ventilation Position	Front
Clearance Required	Zero back and sides
Cord Length (Meters)	2.13
Standard w/ Locks	Standard

Technical	
Temperature Range	0.5 : 3.3°C
Refrigerant	R290
Voltage/Frequency/Phase	220-240V/50-60Hz/1
Amps	0.8
Watts	184
Climate Class	5
Operating Statement	Heavy Duty: This appliance is intended for use in ambient temperatures up to 40°C.
Test Standard	EN 16825
EEC	A
Energy Efficiency Index	23.9
Defrost Type	Auto
Energy Consumption (kWh/24h)	1.24
Energy Consumption (kWh/Annum)	451

Specifications subject to change without notice.
Chart dimensions rounded up to the next whole millimeter (inches rounded up to the 1/8")

UK & Ireland	0800 783 2049	TFIUK@truemfg.com
EMEA	+41 61 563 07 05	TrueCHCustomerService@truemfg.com
Australia	+61 2 9619 9999	TrueRefAus@truemfg.com

Counters & Undercounters

TUC-27D-2-HC

Undercounter Foodservice Refrigerator, 2 Drawers

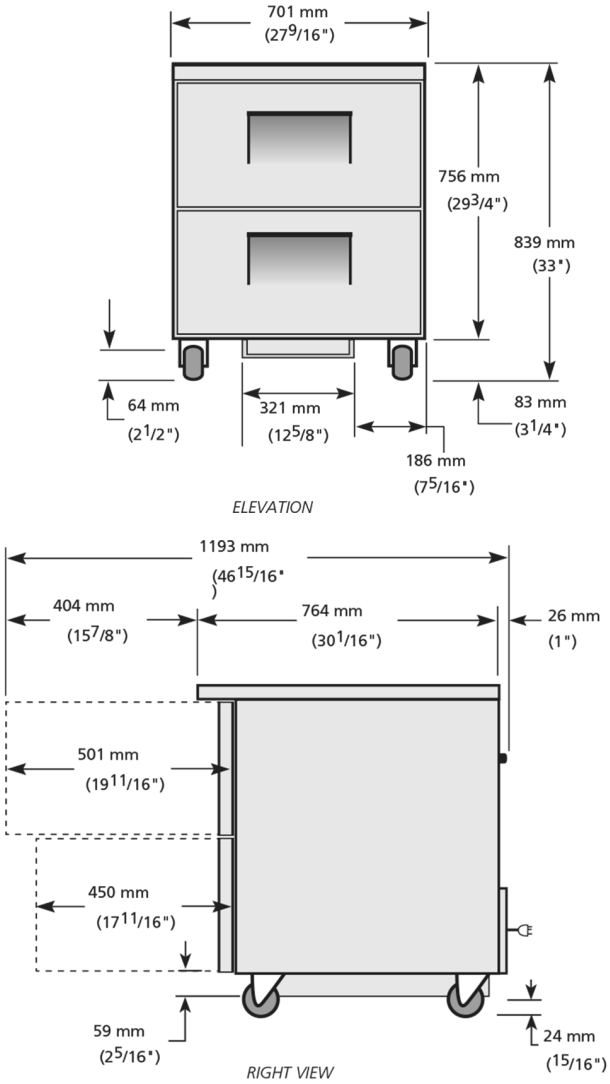

Specifications subject to change without notice.
Chart dimensions rounded up to the next whole millimeter (inches rounded up to the 1/8")

UK & Ireland	0800 783 2049	TFIUK@truemfg.com
EMEA	+41 61 563 07 05	TrueCHCustomerService@truemfg.com
Australia	+61 2 9619 9999	TrueRefAus@truemfg.com