Counters & Undercounters

TWT-67-HC

Deep Worktop Counter Refrigerator, 2 Solid Swing Doors

Dimensions	
External Width (mm)	1709
External Depth (mm)	823
External Height (mm)	1004
Exclusions	Depth does not include 26 mm for rear bumpers.
Net Volume (Litres)	484
Gross Volume (Litres)	583
Supplied Shelves	4
Shelf Size (L x D mm)	601 x 712
Internal Net Height (mm)	550
Unpackaged Weight (kg)	180
Packaged Weight (kg)	191
Packaged Dimensions (W x D x H mm)	1880 x 966 x 1245
Supplied with	Heavy duty lock-in-place ø 127 mm castors (158 mm height)

Build	
Door Description	2 Solid Swing Doors
Exterior Construction	Stainless steel front & countertop, aluminium sides & rear
Interior Construction	Clear coated aluminium, stainless steel base
Air Intake Position	Front
Ventilation Position	Front
Clearance Required	Zero back and sides
Cord Length (Meters)	2.13
Standard w/ Locks	Not Standard (SPEC3 option)

Technical	
Temperature Range	0.5 : 3.3°C
Refrigerant	R290
Voltage/Frequency/Phase	220-240V/50-60Hz/1
Amps	1.3
Watts	299
Climate Class	5
Operating Statement	Heavy Duty: This appliance is intended for use in ambient temperatures up to 40°C.
Test Standard	EN 16825
EEC	A
Energy Efficiency Index	24.1
Defrost Type	Auto
Energy Consumption (kWh/24h)	2
Energy Consumption (kWh/Annum)	729

natural refrigerant

Specifications subject to change without notice.
Chart dimensions rounded up to the next whole millimeter (inches rounded up to the 1/8")

UK & Ireland 0800 783 2049 TFIUK@truemfg.com
EMEA +41 61 563 07 05 TrueCHCustomerService@truemfg.com
Australia +61 2 9619 9999 TrueRefAus@truemfg.com

Counters & Undercounters

TWT-67-HC

Deep Worktop Counter Refrigerator, 2 Solid Swing Doors

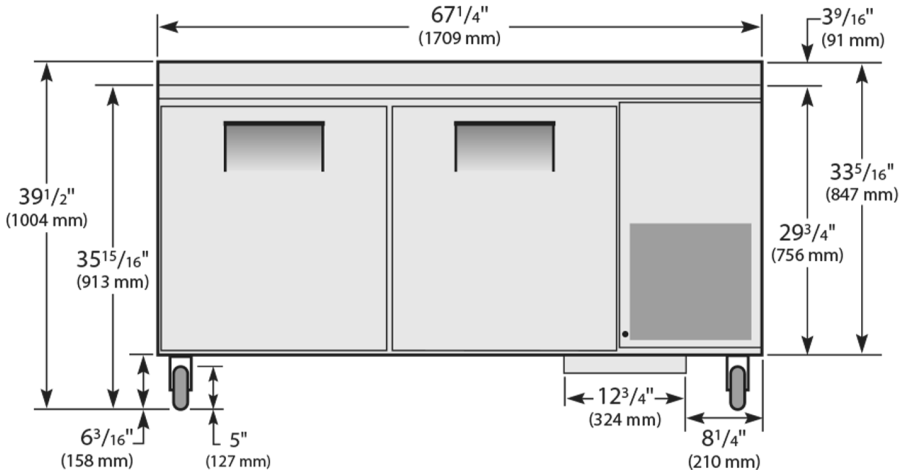

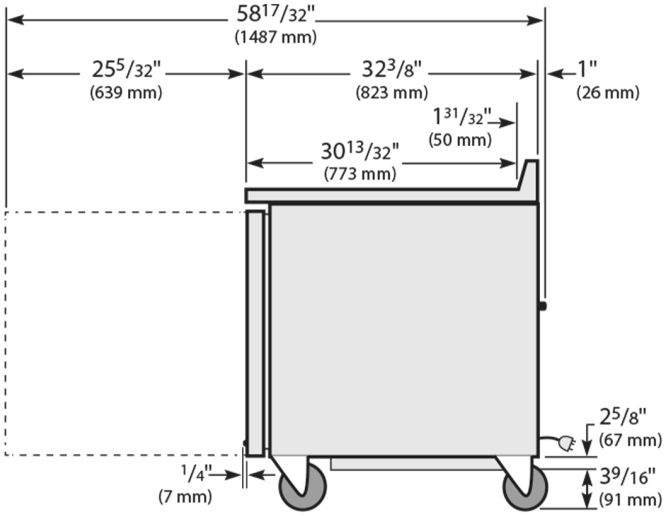

natural refrigerant.

Specifications subject to change without notice.
Chart dimensions rounded up to the next whole millimeter (inches rounded up to the 1/8")

UK & Ireland	0800 783 2049	TFIUK@truemfg.com
EMEA	+41 61 563 07 05	TrueCHCustomerService@truemfg.com
Australia	+61 2 9619 9999	TrueRefAus@truemfg.com